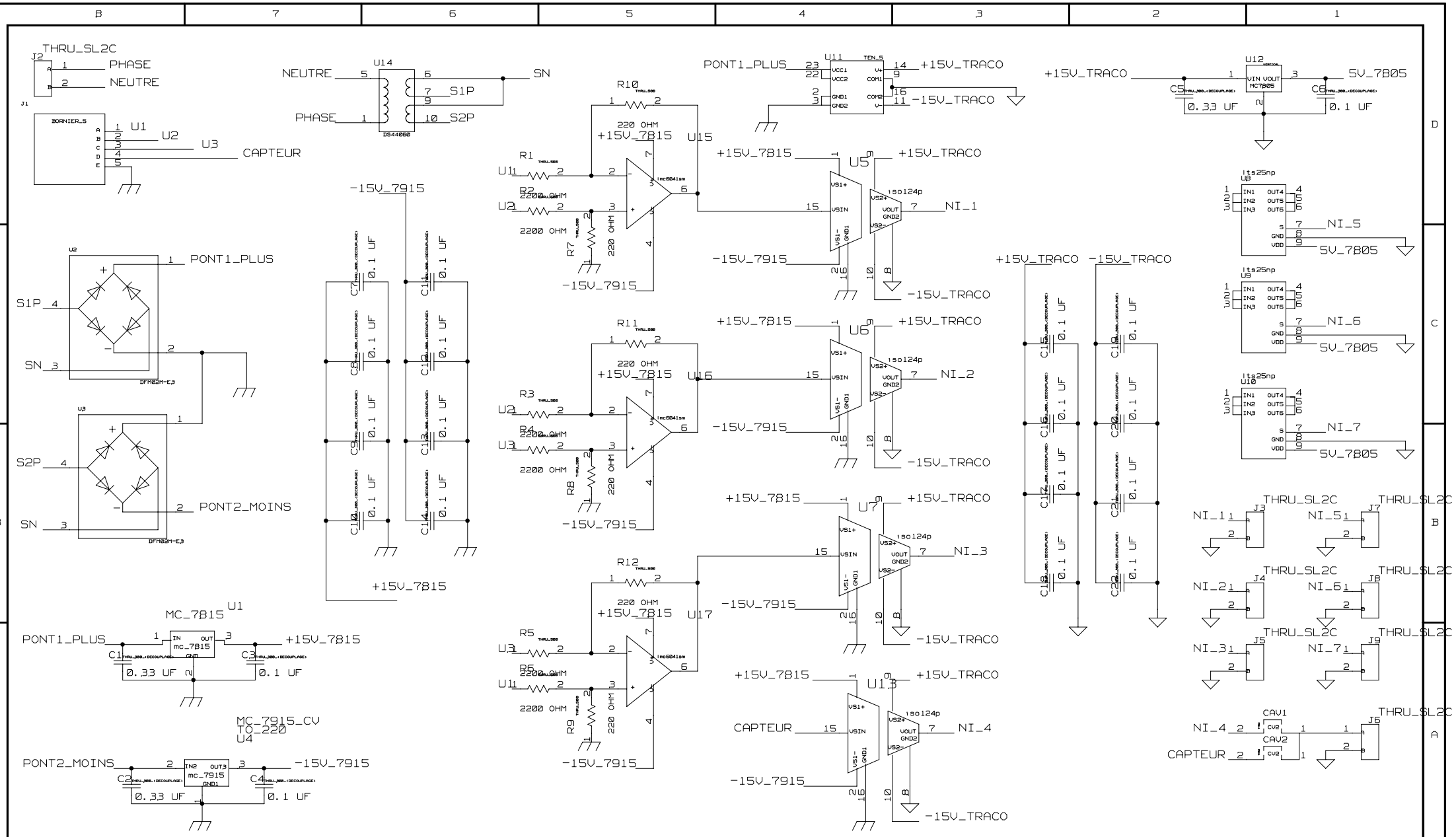

THIS DOCUMENT CONTAINS INFORMATION PROPRIETARY TO CADENCE DESIGN SYSTEMS INC (CADENCE). USE OR DISCLOSURE WITHOUT THE WRITTEN PERMISSION OF AN OFFICER OF CADENCE IS EXPRESSLY FORBIDDEN. COPYRIGHT (C) CADENCE

cadence

TITLE:

DATE:

ENGINEER:

PAGE: